High Performance Germany Type Hose Clamp

High performance with super torque strength
Provide an extra-tight seal
Non symmetric housing prevents clamp tilt when fastening
The high performance embossed worm clamps are suited to applications with high loading torque requirement, including cooling system and hydraulic circuit in automobile, machinery manufacturing, top engineering, shipbuilding etc.

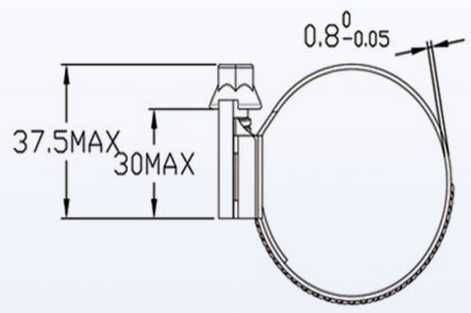

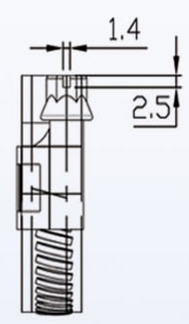

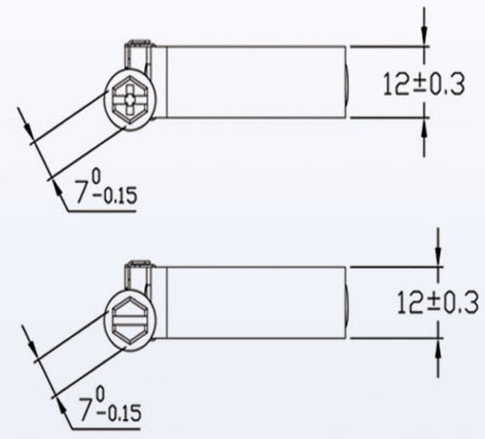

K-SEAL code	Band	Housing	Screw	Corrosion Resistance	Suggest Installation Torque(Nm)
KPEBMXX(W2)	201 SS	201 SS	galvanized steel	Good	See table
KPEBGXXSS	AISI 304 SS	AISI 304 SS	AISI 304 SS	Better	See table
KPEBLXXSS	AISI 316 SS	AISI 316 SS	AISI 316 SS	Best	See table

Part Number W2material	Part Number W4 material	Part Number W5material	Diameter Range(mm)	Installation Torque(N.m)	QTY/Carton
KPEBM9X012	KPEBG9X012SS	KPEBL9X012SS	8-12	3.0	1000
KPEBM9X016	KPEBG9X016SS	KPEBL9X016SS	10-16	3.0	500
KPEBM9X020	KPEBG9X020SS	KPEBL9X020SS	12-20	3.0	500
KPEBM9X025	KPEBG9X025SS	KPEBL9X025SS	16-25	3.0	500
KPEBM9X032	KPEBG9X032SS	KPEBL9X032SS	20-32	4.5	500
KPEBM9X040	KPEBG9X040SS	KPEBL9X040SS	25-40	4.5	500
KPEBM9X050	KPEBG9X050SS	KPEBL9X050SS	32-50	4.5	500
KPEBM9X060	KPEBG9X060SS	KPEBL9X060SS	40-60	4.5	400
KPEBM9X070	KPEBG9X070SS	KPEBL9X070SS	50-70	4.5	400
KPEBM9X080	KPEBG9X080SS	KPEBL9X080SS	60-80	4.5	400
KPEBM9X090	KPEBG9X090SS	KPEBL9X090SS	70-90	4.5	400
KPEBM9X100	KPEBG9X100SS	KPEBL9X100SS	80-100	4.5	400
KPEBM9X110	KPEBG9X110SS	KPEBL9X110SS	90-110	4.5	300
KPEBM9X120	KPEBG9X120SS	KPEBL9X120SS	100-120	4.5	300
KPEBM9X130	KPEBG9X130SS	KPEBL9X130SS	110-130	4.5	300
KPEBM9X140	KPEBG9X140SS	KPEBL9X140SS	120-140	4.5	300
KPEBM9X150	KPEBG9X150SS	KPEBL9X150SS	130-150	4.5	200
KPEBM9X160	KPEBG9X160SS	KPEBL9X160SS	140-160	4.5	200

Part Number W2material	Part Number W4 material	Part Number W5material	Diameter Range(mm)	Installation Torque(N.m)	QTY/Carton
KPEBM12X012	KPEBG12X012SS	KPEBL12X012SS	8-12	6.0	1000
KPEBM12X016	KPEBG12X016SS	KPEBL12X016SS	10-16	6.0	500
KPEBM12X020	KPEBG12X020SS	KPEBL12X020SS	12-20	6.0	500
KPEBM12X025	KPEBG12X025SS	KPEBL12X025SS	16-25	6.0	500
KPEBM12X032	KPEBG12X032SS	KPEBL12X032SS	20-32	6.0	500
KPEBM12X040	KPEBG12X040SS	KPEBL12X040SS	25-40	6.0	500
KPEBM12X050	KPEBG12X050SS	KPEBL12X050SS	32-50	6.0	500
KPEBM12X060	KPEBG12X060SS	KPEBL12X060SS	40-60	6.0	400
KPEBM12X070	KPEBG12X070SS	KPEBL12X070SS	50-70	6.0	400
KPEBM12X080	KPEBG12X080SS	KPEBL12X080SS	60-80	6.0	400
KPEBM12X090	KPEBG12X090SS	KPEBL12X090SS	70-90	6.0	400
KPEBM12X100	KPEBG12X100SS	KPEBL12X100SS	80-100	6.0	400
KPEBM12X110	KPEBG12X110SS	KPEBL12X110SS	90-110	6.0	300
KPEBM12X120	KPEBG12X120SS	KPEBL12X120SS	100-120	6.0	300
KPEBM12X130	KPEBG12X130SS	KPEBL12X130SS	110-130	6.0	300
KPEBM12X140	KPEBG12X140SS	KPEBL12X140SS	120-140	6.0	300
KPEBM12X150	KPEBG12X150SS	KPEBL12X150SS	130-150	6.0	200
KPEBM12X160	KPEBG12X160SS	KPEBL12X160SS	140-160	6.0	200

Available in packed and bulk stock. Other packaging methods available.
Clamps meet or exceed DIN3017.
More SIZES AVAILABLE UPON REQUEST.

MORE SIZES AVAILABLE UPON REQUEST

8220 Huangshan Avenue,
Bengbu, Anhui 233010, China
www.ksealhoseclamp.com

Tel:86 552 4129667
Fax:86 552 4129668
Email:globalsales@kingseal.cn